# Multistage pumps for light hydrocarbon



COPY COMPLIANT to the original document resident on the computer system at the time of printing

# Index

1. Purpose ....3
2. Abbreviations. ....3
3. Basic knowledge. ....4
   3.1. BB3 pumps. ....5
   3.2. BB5 pumps. ....7
4. Materials of Pump Construction. ....8
5. BB3 versus BB5 selection. ....10
6. Pump with HLC and rotordynamic. ....12
   6.1. Introduction. ....12
   6.2. Fluid with low density (LHC). ....13
7. $NPSHa$, $NPSH_r$, fluid heating and balance line management. ....14
8. References ....16
9. Annex A: BB5 configuration. ....17
10. Annex -B: physical properties of common pumped hydrocarbon. ....19



COPY COMPLIANT to the original document resident on the computer system at the time of printing

# 1. Purpose

This document defines the guidelines for establishing a criterion for the selection of BB3 type pumps as an alternative to BB5 when the operating fluid is a light hydrocarbon[1].

The procedure is applicable for the Nova Milanese and La Spezia plants.

# 2. Abbreviations.

| | |
|---|---|
| $GWP$ | global warming potential |
| $LHC$ | light hydrocarbon (SG<0.7) |
| $MDMT$ | minimum design metal temperature [°C] |
| $MAWP_{BB3}$ | minimum design metal temperature [°C] |
| $SG$ | specific gravity of the fluid [-] |
| $SG_{critical\ point}$ | specific gravity of the fluid at the critical point [-] |
| $NPSH_a$ | net positive suction head allowable [m] |
| $NPSH_r$ | net positive suction head required [m] |
| $NSS$ | suction specific speed [-] |
| $X_{hydrogen}$ | mass percentage of hydrogen in the fluid [-] |

[1] In this document, a light hydrocarbon, or LHC, is a hydrocarbon whose specific gravity is lower than 0.7.



COPY COMPLIANT to the original document resident on the computer system at the time of printing

# 3. Basic knowledge.

This document covers the pump types normally used and their materials of construction for LHC; usually they require high pressures, so multistage pumps is necessary. The three main pump types used for API 610 compliant service are listed below:

- axially split multistage, between-bearings pump (BB3);
- double-casing radially split multistage, between-bearings pump (BB5);
- double-casing diffuser, vertical suspended pump (VS6).

Although they are multistage pumps, BB4 are not included in the previous list since usually they are not applied for critical services. Moreover, this type does not meet all the requirements of API610 standard.

VS6 pumps are not discussed in this document.



COPY COMPLIANT to the original document resident on the computer system at the time of printing

## 3.1. BB3 pumps.

This multistage pump is very common int the pipeline industry. It is preferred due to the ease of field servicing (take off the top half casing and the rotor can be inspected/removed in one piece and a new one swapped in). Being a single casing, it has a lower first cost than double-casing designs such as BB5. Impellers are usually mounted back-to-back, reducing axial thrust and improving rotor stability.

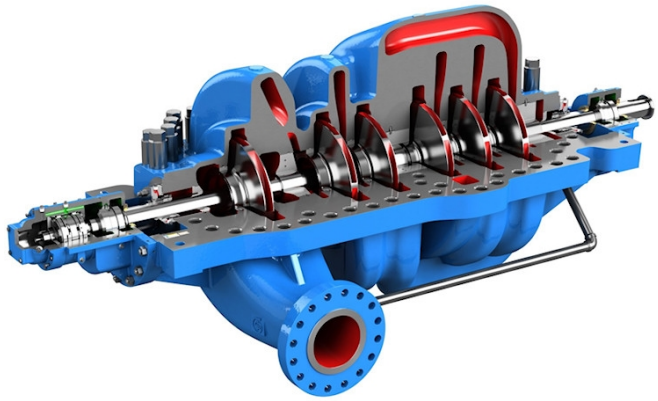

**Technical data**

- Q ≤ 2000 $m^3/h$
- H ≤ 2500 m
- -30 ºC ≤ $T_{operating}$ ≤ 200 ºC
- $p_{design}$ ≤ 40 bar (standard executions)
- $p_{design}$ ≤ 210 bar (special executions)
- SG ≥ 0.3
- rotational speed ≤ 3600 rpm

**API610 recommended limits**

- SG ≥ 0.7
- pressure ≤ 100 bar

API 610 12th edition (§6.3.12) prescribes that, unless otherwise specified, for any of the following operating conditions pumps with radially split casings are required in services:

a) pumping temperature of 400 °F (200 °C) or higher;
b) liquids with a relative density of less than 0.7 at the specified pumping temperature;
c) liquids at a rated discharge gauge pressure above 100 bar;
d) liquid temperature transients greater than 55 °C;
e) liquid temperature transients that cause casing metal temperature change rates greater than 3 °C per minute.

Axially split casings have been used successfully beyond the limits given above, particularly for pipeline applications at higher pressure and with lower relative density (specific gravity). The success of such applications depends on the margin between design pressure and rated pressure, the manufacturer's experience with similar applications, the design and manufacture of the split joint, and the user's ability to correctly remake the split joint in the field. The purchaser usually considers these factors before specifying an axially split casing for conditions beyond the above limits.

Item d) and e) are for operating cases where a pump can be "shocked" if pumping liquids with different temperatures. These temperature transients tend to occur during start-up for a pump that


COPY COMPLIANT to the original document resident on the computer system at the time of printing

is not warmed-up or cooled down ahead of the introduction of process liquid. Item d) is addressing step-changes in pumped liquid temperature, and item e) addresses a slower rate of change in temperature but still exceeds the casing material temperature change rate.

The main limiting factor for very low SG hydrocarbon fluids is permeation through the gasket (which results in increased HC emissions). Certain gasket material compositions can reduce this somewhat but not prevent it.



COPY COMPLIANT to the original document resident on the computer system at the time of printing

## 3.2. BB5 pumps.

This multistage pump is utilized when pump reliability and minimum emissions are critical success factors. The inclusion of a barrel casing increases cost, and these will typically have a noticeably higher first cost than the BB3 and BB4 pump types.

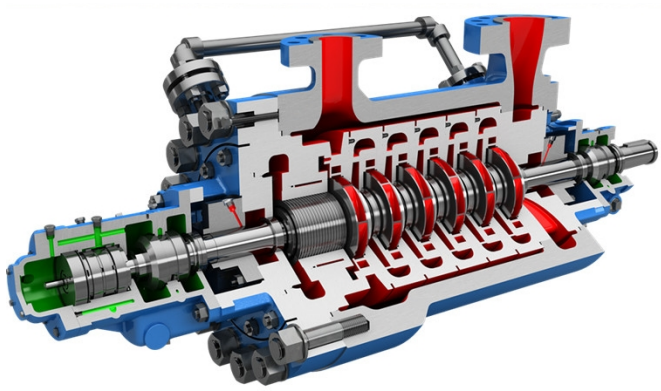

**Technical data**

- Q ≤ 3000 $m^3/h$
- H ≤ 7000 m
- $T_{operating}$ ≤ 427 ºC
- $p_{design}$ ≤ 300 bar
- SG ≥ 0.15
- rotational speed ≤ 6500 rpm

Radially split casings shall have metal-to-metal fits, with confined controlled-compression gaskets, such as an O-ring or a spiral-wound type. Gaskets other than spiral wound may be proposed and furnished if proven suitable for service and approved by the purchaser. Radially split pressure casing joints and bolting shall be designed to seat a spiral-wound gasket.

Spiral-wound gaskets are generally preferred because they are perceived by users to have had better availability, are more conducive to material identification, have a broader chemical compatibility and temperature range, contact a wider sealing surface (are less susceptible to leakage because of sealing surface irregularities), and are easier to handle and store than 0-rings.

Most BB5 designs available in the marketplace are inline diffuser designs, which results in higher axial thrust than a comparable BB3. This may require higher capacity bearing arrangements, such as forced lubrication tilting pad thrust bearings.

The limiting SG with this design is usually determined by its rotordynamics: lower SG means less Lomakin Effect at shaft positions that are very effective regarding critical speed and damping (i.e., wear ring, balancing piston, etc…), and int can cause a lack of stability at operating speed.



COPY COMPLIANT to the original document resident on the computer system at the time of printing

# 4. Materials of Pump Construction.

The main driver for material selection is the MDMT. It is required to consider the minimum process temperature but also fault conditions such as uncontrolled boil-off of the fluid (i.e., auto-refrigeration).

For MDMT greater or equal to -46°C, the normal recommended material choice is S-6, which is a low temperature carbon steel casing with chrome steel internal parts. While it is possible to go to lower temperatures with carbon steel, the testing becomes very onerous, supply is limited and a material impact test failure will severely disrupt the project plan since the affected part must be remade. A reasonable guidance is to limit S-6 construction to ASTM A352 Gr LCB and the temperature limit noted.

For MDMT below -46°C, the normal recommended material choice is A-8 which is a fully austenitic stainless-steel casing and internal parts. This material choice adds significant cost since the material is weaker than carbon steel (a heavier pump), more expensive and internal parts often require costly overlays to prevent galling.

*Table 1 Non-metallic wear parts.*

| Material | Temperature limits [°C] | | Application |
|---|---|---|---|
| | Min | max | |
| Polyether ether ketone (PEEK)<br>Chopped-carbon-fiber filled | *-30* | *135* | stationary parts |
| PEEK<br>Continuous-carbon-fiber wound | *-30* | *230* | stationary or rotating parts |
| Perfluoroalkoxy/Carbon-fiber (PF NCF)<br>Carbon-fiber Filled | *-46* | *230* | stationary parts |
| Carbon graphite<br>Resin-impregnated<br>Babbitt-impregnated<br>Nickel-impregnated<br>Copper-impregnated | <br>*-50*<br>*-240*<br>*-240*<br>*-240* | <br>*285*<br>*150*<br>*400*<br>*400* | stationary parts |
| Non-metallic wear part materials that are proven compatible with the specified process liquid may be proposed within the above limits.<br>Such materials may be selected as wear components for mating against a suitably selected metallic component such as hardened 12 % Cr steel or hard-faced austenitic stainless steel. Materials may be used beyond these limits if proven application experience can be provided and if approved by the purchaser. | | | |

If pumped fluid is clean (i.e., ≤ 300 ppm solids), it is strongly recommend utilizing non-metallic wear parts (Table 1). They are preferable since:

- LHCs have less stabilizing effect on the rotor, so smaller clearances are required which can cause galling with metallic parts;
- LHCs have low lubricity and it increases metallic part wear in start/stop;



COPY COMPLIANT to the original document resident on the computer system at the time of printing

- with low temperatures achieving 50 Brinell hardness differences at wear parts is more difficult (weld overlays are often required increasing cost).



COPY COMPLIANT to the original document resident on the computer system at the time of printing

## 5. BB3 versus BB5 selection.

As previously describes, the BB3 axially split multistage pump is the most common multistage style applied in the pipeline industry. This pump type utilizes heavy bolting and a flat gasket to seal the axial joint between the casing halves. On heavier hydrocarbons (SG ≥ 0.7), permeation of the pumped fluid through the gasket is very low. However, with lighter fluids, gasket permeation can increase significantly. For the intents of this document, *permeation* is an umbrella term covering several possible modes for the fluid to pass through the gasket and being released into the atmosphere:

- *laminar flow* through capillaries in the gasket material;
- *molecular flow* through smaller capillaries in the gasket material in accordance with the **Knudsen's Law**;
- *diffusion* of the fluid through the polymer binder of the gasket itself in accordance with **Fick's Law.**

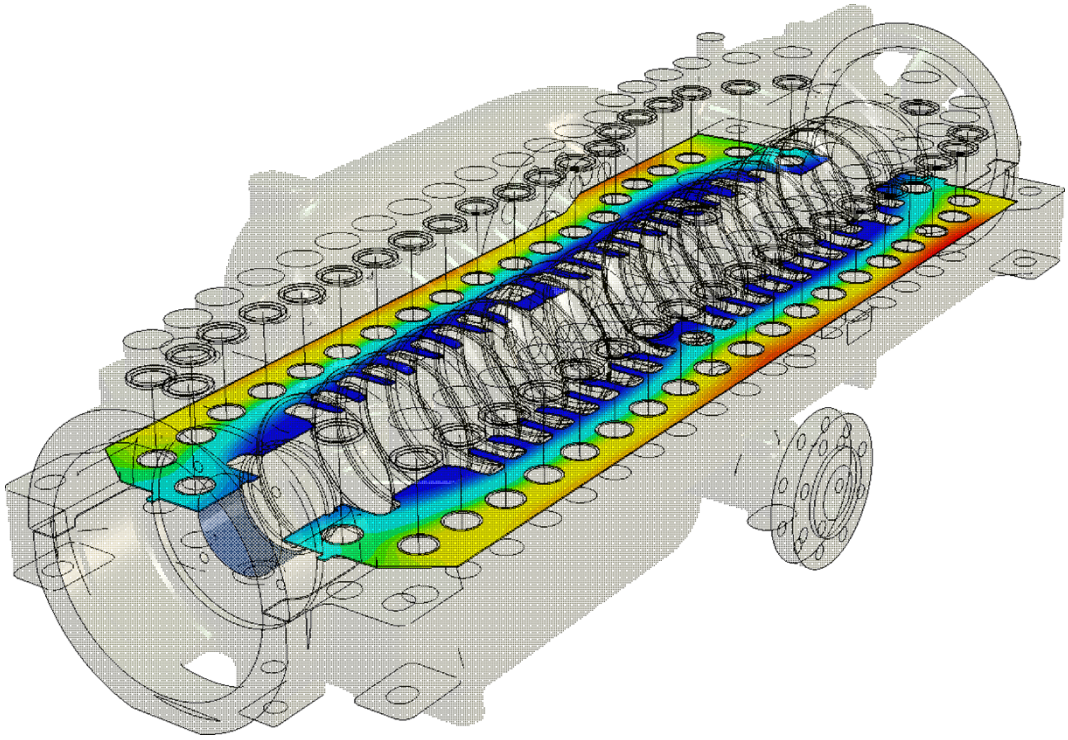

*Figure 1 Gasket profile.*

Usually for BB3 pump the gasket profile is a complex geometry with several cutouts (Figure 1). The physics of the three mechanism of permeation is not straightforward and still the subject of research, however we can reasonably correlate the overall level of permeation to the density and viscosity of the fluid together with the pressure differential across the gasket.



COPY COMPLIANT to the original document resident on the computer system at the time of printing

Anywhere, it is very difficult to define a valid criterion to guarantee that BB3 pump is acceptable: handled fluids are flammable, they cause air pollution and can have significant GWP (e.g., ethane has 5.5 times the GWP of carbon dioxide).

API 610 limits (SG ≥ 0.7, pressure ≤ 100 bar) have been found to be very conservative in practice, with many pumps operating successfully well beyond these criteria.

A useful reference point comes from the compressor industry: in API 617[2] exists a limit for axially split compressors to services where the partial pressure of hydrogen is over 13.80 bar. This rule has the advantage that it considers the amount of a small flammable molecule which is a more nuanced risk assessment than the API 610 rules.

By analogy, it is possible to infer a numerical relationship applicable to pumps:

$$MAWP_{BB3} = \frac{13.80\ bar}{\chi_{hydrogen}} \cdot \frac{SG}{SG_{critical\ point}}$$

$MAWP_{BB3} = maximum\ allowable\ working\ pressure\ for\ BB3\ pump\ [bar]$

$SG = specific\ gravity\ of\ the\ fluid\ [-]$

$SG_{critical\ point} = specific\ gravity\ of\ the\ fluid\ at\ critical\ point\ [-]$

$\chi_{hydrogen} = mass\ percentage\ of\ hydrogen\ in\ the\ fluid\ [-]$

To use this formula, it is necessary to evaluate the density of the fluid both at rated process temperature and at the critical point (NIST webbook, https://webbook.nist.gov/chemistry/, is a good source for these data). If the fluid is in super critical state, liquid and gas phases no longer exist separately, the pump is like a compressor and this step is omitted.

Although it is not negligible that hydrogen in pumped fluids is chemically bonded to other elements, the percentage of hydrogen is used as a proxy for how small the molecule is (i.e., its kinetic diameter) and hence in part how likely it is able to permeate through the gasket.

---

[2] From API 617:

**2.3.1.3** *Unless otherwise specified, casings shall be radially split when the partial pressure of hydrogen (at maximum allowable working pressure) exceeds 1380 kPa gauge (200 psi gauge). The partial pressure of hydrogen shall be calculated by multiplying the highest specified mole (volume) percent of hydrogen by the maximum allowable working pressure.*



COPY COMPLIANT to the original document resident on the computer system at the time of printing

# 6. Pump with HLC and rotordynamic.

## 6.1. Introduction.

Fluid interactions between stator and rotor has great influences on rotor behaviour in operating conditions: their effects are sensible specially when fluid is forced to pass across reduced annular clearance (e.g., wear ring, balance pistons, etc…). This mechanism is known as *Lomakin effect*, and it can change both critical speeds and damping of the system (Figure 2).

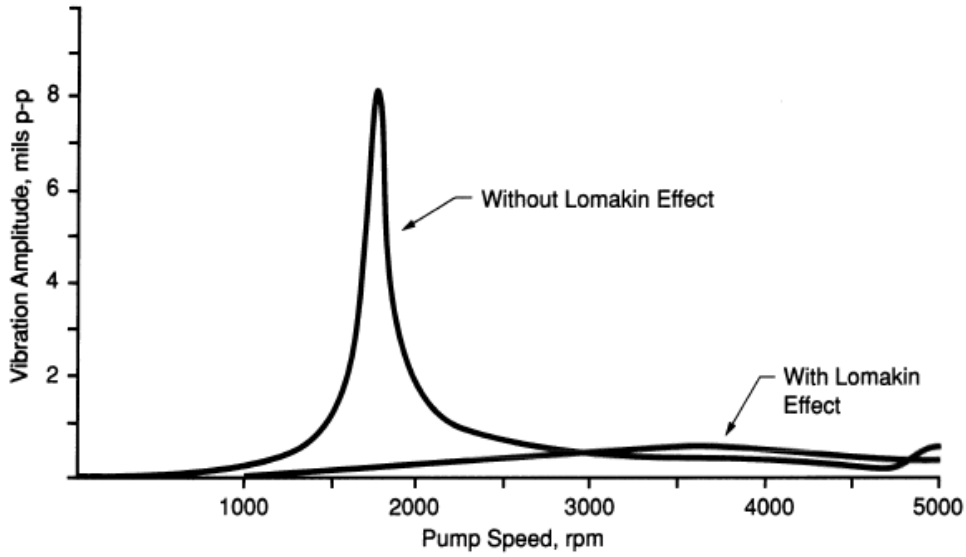


*Figure 2 Influence of Lomakin effect on rotor dynamic response.*

The Lomakin effect is a product of hydrostatic (pressure) and hydrodynamic (velocity and viscosity) action as liquid passes through a pump's internal running clearances under the action of a differential pressure. The magnitude of the Lomakin effect depends on:

- the pressure drop across the running clearances;
- the surface speed;
- the geometry (length, clearance, and surface form);
- the liquid viscosity and density.

One of the most important parameters is the clearance: higher value reduces the amplitude of the restoring force generated, while smaller gap between stator and rotor increases its value (Figure 3), specially for smooth solutions.



COPY COMPLIANT to the original document resident on the computer system at the time of printing

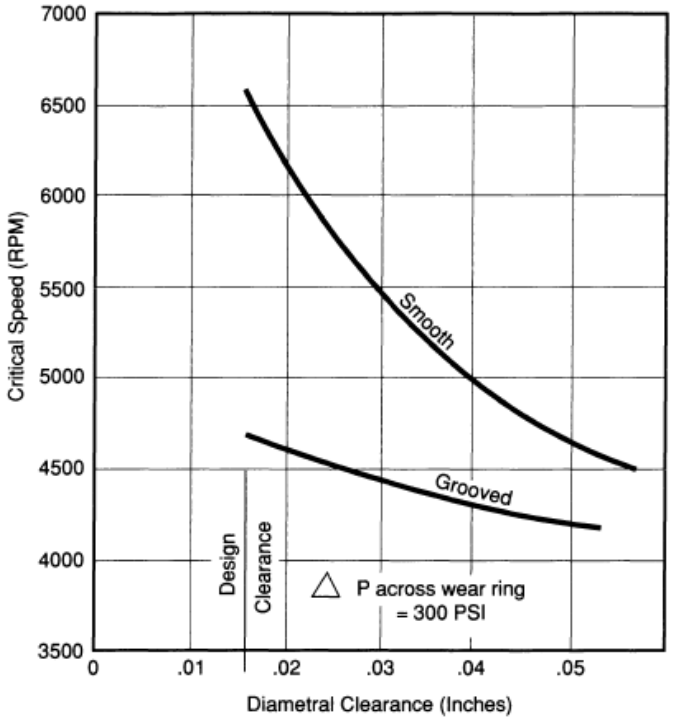


*Figure 3 Effect of running clearance wear on wet critical speed.*

## 6.2. Fluid with low density (LHC).

Compared to other fluid with higher SG like water, etc…, the LHC has a significantly lower Lomakin effect due to its physical properties (density and viscosity).

For costs, $NPSH_r$ and efficiency reasons, multistage pump rotors are not “classically stiff”, meaning the first natural frequency of the rotor in air is below running speed.

Without Lomakin contribution (or with limited effect correlated with the use of LHC) to adequate separation and damping, a design a rotor without excessive vibration in operating conditions can become challenging.

If the Lomakin effect contribution for LHC is not sufficient to achieve rotor stability, the preferred method to resolve the problem is to reduce the clearances inside the pump We could also lighten the rotor by utilizing impellers in materials such as titanium, but this is a costly option with other side effects and so seldom implemented.

With reduced internal clearances comes an increased risk of contact under transient conditions (e.g., a process upset). Generally, pump vendors will allow the use of metallic wear rings with internal clearances that are around 75% of those mandated by API 610. With clearances below 75% of API 610, non-metallic wear rings must be used.



COPY COMPLIANT to the original document resident on the computer system at the time of printing

# 7. $NPSHa$, $NPSH_r$, fluid heating and balance line management.

Many LHC services are close to the boiling point of the fluid and hence $NPSH_a$ is very limited; anywhere, for these services $NPSH_a/NPSH_r$ requires only small margin (≈1.15) for a two main reasons:

- although API 610 doesn't allow it to be considered, the Hydrocarbon Correction Factor (or Thermodynamic Effect as it is also known), means that the pump $NPSH_r$ is lower when pumping LHCs than with water;
- the cavitation experienced with hydrocarbons is relatively benign compared to that experienced with water with much lower shock being generated from the bubble collapse.

To reduce the pump $NPSH_r$ a double entry or a high $NSS$ first stage impeller can be used. Another choice is the adoption of an inducer fitted ahead the first stage impeller.

A hard $NSS < 11000$ limit for these services.is not recommended, since $NSS$ limits are less important on multistage pumps where only one impeller affected and single value $NSS$ limits are not appropriate on any pump.

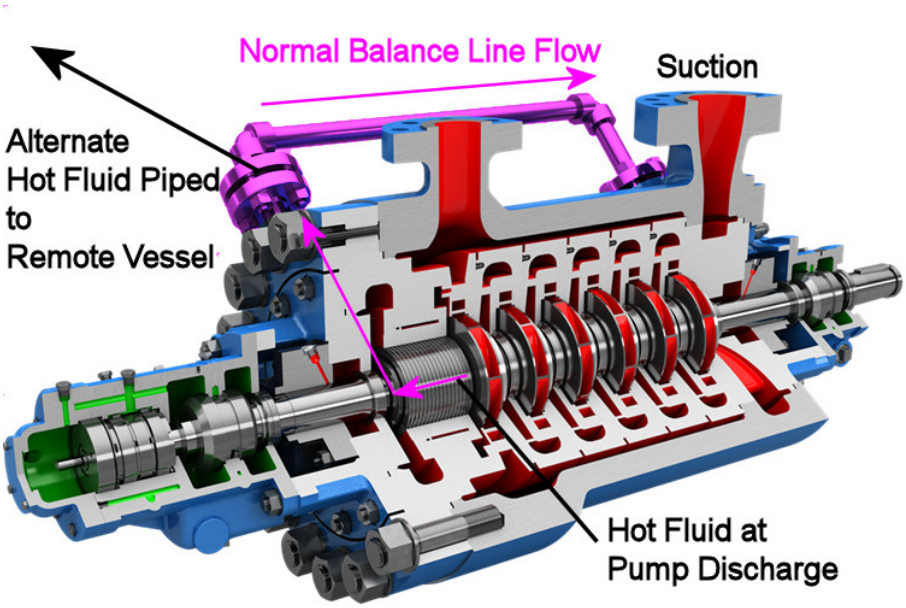


*Figure 4 Balance line flow.*

Due to the pump inefficiency, the pumped fluid will increase its temperature as it passes through the pump. Consequently, the fluid vapor pressure also increases. BB3, BB4 and BB5 pump types all utilize a balance line that returns fluid, that has passed through the axial thrust compensation device, back to the suction of the pump (Figure 4).



COPY COMPLIANT to the original document resident on the computer system at the time of printing

Since this balance line is essentially at suction pressure, the hotter fluid, and its higher vapor pressure, may cause flashing in the balance line which could then vapor lock the pump. Even if it does not cause flashing, the hot balance line fluid mixes with the cooler fluid in the suction branch reducing the effective $NPSH_a$ at the pump suction. In some cases, this necessitates an alternative piping of the balance line back to a remote vessel where vapor formation can be handled without disrupting the pump suction.

Fitting non-metallic wear parts with reduced clearances is helpful in these situations because they increase the pump efficiency and reduce leakage through the impeller eye wear ring.

It is very important that pump supplier gets full information on the fluid being pumped including:

- vapor pressure vs temperature curve or tabulation;
- fluid density vs temperature curve or tabulation;
- specific heat capacity of the fluid (these fluids have low specific heat capacity which results in larger temperature rises).



COPY COMPLIANT to the original document resident on the computer system at the time of printing

# 8. References

*Centrifugal Pumps (I.J. Karassic, T. McGuire)*

*API Standard 610 12th edition, January 2021 – Annex K.*

*Evaluation of Rotordynamic Criteria for Multistage Pumps shaft (W. Lienau – N. Lagas)*

*Mod.xxx Rev.0 - ENG - BB5 configurator*



COPY COMPLIANT to the original document resident on the computer system at the time of printing

# 9. Annex A: BB5 configuration.

As previously explained in chapter 3.2, rotordynamic stability is the most restrictive criterion for BB5 pumps: the high pressure requires high number of stages, the rotor is not classically stiff and Lomakin effect is penalized when pumping LHC. A pump with a high stage number and pumping very light fluid has low resonance frequencies and damping levels; the rotor can become unstable when negative damping levels are encountered.

However, back-to-back configuration reduces bearing spans and adds damping in the middle of the shaft, in the center bushing, where its beneficial effect on stability is usually maximum.

A second improvement is the adoption of swirl brakes, that are able to reduce the swirl entering the seals or bushing; two configurations are available: radial slots and radial bore (Table 2).

*Table 2 Swirl brakes.*

| **Radial slots** | **Radial bores** |
|---|---|
| 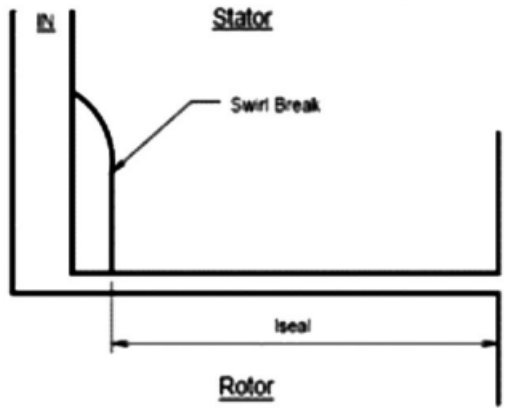  | 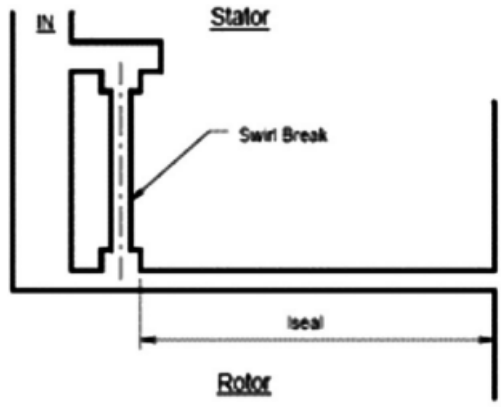  |
| Radial slot swirl brakes are conventional type consisting of a certain number of radial slots placed directly in front of the balance piston (in-line design) or center bushing (back-to-back design). The slots reduce the tangential speed of the fluid entering the seal or the bushing. | Radial bore swirl brakes consist of radial bores machined on the static part of the bushing, which inject fluid in the radial direction in order to create a fluid grid that reduces the swirl in the gap more efficiently. This option is very efficient about the damping but has an impact on hydraulic efficiency and reduces the length of the bushing |

Adopting API 610 Annex I acceptability criteria, an useful diagram for the preliminary selection of BB5 configuration is depicted (Figure 5), calculating the maximum allowable stage number for a pump driven by 60 Hz motor both for in-line and back-to-back configuration; moreover some general



COPY COMPLIANT to the original document resident on the computer system at the time of printing

rules based on experience regarding swirl brakes and a minimum value density of fluid (475 kg/m$^3$) below which it is preferable not to use this type of pump are included.

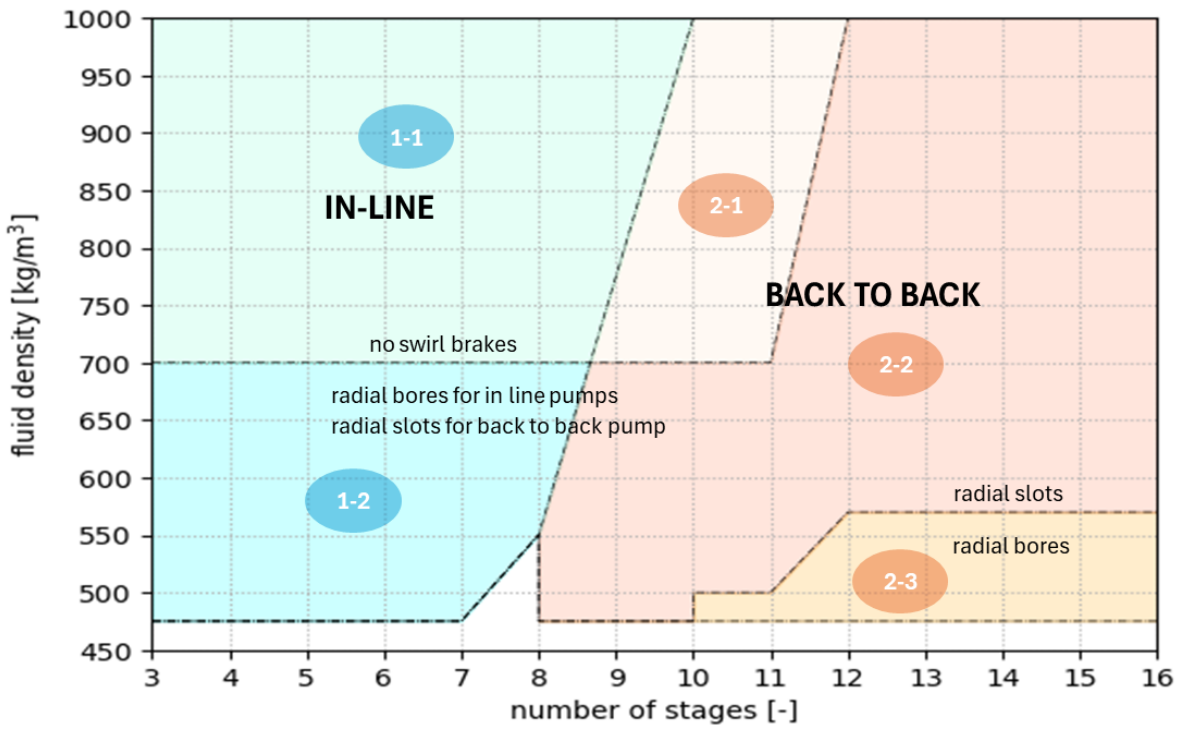


*Figure 5 BB5 configuration.*

The five BB5 configurations of this picture are:

- 1-1 in-line pump without swirl brakes;
- 1-2 in-line pump with radial bores at balance piston;
- 2-1 back-to-back pump without swirl brakes;
- 2-2 back-to-back pump with radial slots at center bushing;
- 2-3 back-to-back pump with radial bore at center bushing.



COPY COMPLIANT to the original document resident on the computer system at the time of printing

# 10. Annex -B: physical properties of common pumped hydrocarbon.

| Compound | $X_{hydrogen}$ [%] | $SG_{critical\ point}$ [%] |
|---|---|---|
| methane | *25.1* | *0.163* |
| ethane | *20.1* | *0.206* |
| ethylene | *14.4* | *0.214* |
| propane | *18.3* | *0.220* |
| propylene | *14.4* | *0.223* |
| butane | *17.3* | *0.228* |
| pentane | *16.8* | *0.232* |
| hexane | *16.4* | *0.233* |
| octane | *15.9* | *0.235* |



COPY COMPLIANT to the original document resident on the computer system at the time of printing